IMMERGAS	SERIAL NUMBER START OF SERIES	12/11/07	HERCULES CONDENSING 27 ABT	06D
	1978900	3.014357		

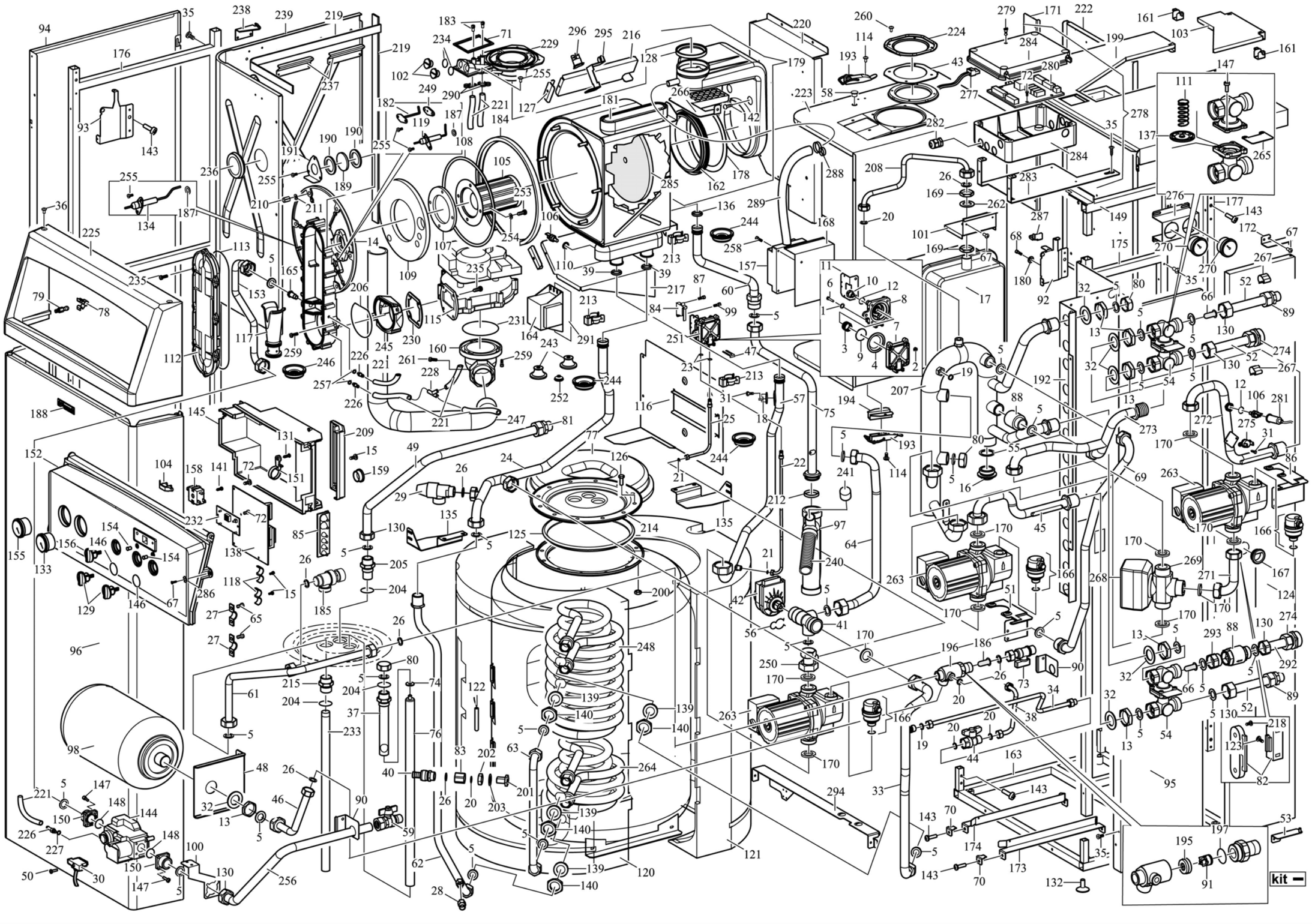

N.	CODE	DESCRIPTION	SERIAL NUMBER START OF SERIES
-	3.014368	Control panel - complete	
-	3.018465	Complete storage tank	
-	3.017588	Control panel - complete	2743345
1	1.0237	4.1x8x0.5 brass washer	
2	1.1391	M4 brass nut	
3	1.2262	Spring for plate	
4	1.2264	Diaphragm, pressure switch	
5	3.A0120	Gasket kit (3/4")	
6	1.2299	M4x25 screw, brass, hex head	
7	1.2300	Housing, pressure switch, noryl	
8	1.2301	Cover, pressure switch, noryl	
9	2.4848	Pressure switch plate - complete	
10	2.4849	Pressure switch cover fitting - complete	
11	2.5298	Bracket for microswitch	
12	1.2269	9.25x1.78 O-ring, nitrile, 70 sh	
13	1.1260	Lowered brass nut (3/4"F)	
14	1.010589	Gas manifold	
15	1.1142	"Rapid fix" self-tapping screw (3,2x16)	
16	1.012594	1" M plug BSP	
17	1.013402	12-litre expansion tank	
18	1.010405	100°C clicson thermostat	
19	3.A0184	Gasket kit (1/4")	
20	3.A1124	Gasket kit (3/8")	
21	3.A2313	Gasket kit (1/8")	
22	1.014432	D.5 pipe, negative pressure takeoff	
23	1.2268	3.68x1.78 O-ring, nitrile, 70 sh	
24	1.018055	D.18 pipe, module return	
25	1.016144	D.5 pipe, positive pressure port	
26	3.A1363	Gasket kit (1/2")	
27	1.7908	Black cable clamp	
28	1.4275	Drain fitting with hose union	
29	1.0180	Safety valve, 3 bar 1/2"M	
30	3.013598	Additional gas valve connection	
31	1.1656	Nickel-plated crosshead self-tapping screw (3,5x6,4)	
32	1.1342	Seal, 34x27x2 in flexoid	
33	1.016146	D.18 pipe, 3-way valve / boiler flow	
34	1.012585	D.8 pipe, stopcock - boiler flow	
35	1.4557	Crossheaded self-tapping screw with shoulder (4,2x9,5)	
36	1.4066	Self-tapping screw (3,5x9,5)	
37	1.5367	Recirculating probe fitting	
38	1.014038	D.8 pipe, cold inlet - filling	
39	1.011141	17.86x2.62 O-ring, silicone, 70 sh	
40	1.0113	1/2"M drain valve	
41	3.012255	3-way valve group	
42	1.014399	3-way valve motor	
43	1.010334	Hole gasket (d.80)	
44	1.018047	3/8" ball valve	
45	1.017605	D.18 pipe, heating system flow - pump	
46	1.016411	D.14 pipe, cold inlet assembly - expansion tank	
47	2.4179	Clip for pressure takeoff fitting	
48	2.010929	Angle bracket, hot water tank	
49	1.016791	D.14 pipe, hot outlet connection	
50	1.010265	Screw for gas valve connector (M3x25)	
51	2.012991	Mounting wall,circulating pump	
52	1.012592	D.18 pipe, system supply	
53	3.011507	Bottom hinge	
54	3.013639	By-pass group	
55	1.5409	28.42x2.62 O-ring, nitrile	
56	1.014397	Motor locking clip	
57	1.018043	D.18 pipe, module - pump	
58	1.017970	Cover, d.5 hole	
59	1.018094	Biconical gas cock (d.18, 1/2")	
60	1.017390	D.18 stainless steel pipe, condensation outlet	
61	1.014042	D.14 pipe,cold water inlet - boiler	
62	1.014993	D.18 pipe, cylinder return	
63	1.012670	D.18 pipe, coil connection	
64	1.016624	D.18 pipe, 3-way valve - manifold	
65	1.7967	Crossheaded self-tapping screw (3,5x19)	
66	1.016823	Filter	
67	1.2275	Flat pointed crossheaded self-tapping screw (4,2x9,5)	
68	1.7030	M4x10 screw, crosshead, swageform	
69	1.016974	D.18 pipe, module return pipe manifold	
70	2.011722	Bracket, cylinder hanger	
71	1.010340	Gasket for flange with sample points	
72	1.2265	"Rapid fix" self-tapping screw (3,2x9,5)	
73	1.013629	Cock G1/2"M-F	
74	1.5364	Seal, 20x8x2 in frizite	
75	1.017023	Condensate drain pipe (d.18)	
76	1.019472	Magnesium anode	
77	1.017122	Insulation cover, boiler cylinder	
78	1.014430	Metal fastener, female	
79	1.014429	Metal fastener, male	
80	1.0257	3/4" F brass plug	
81	1.020058	Tube fitting (Vabco, d.14, -1/2"M)	
82	1.1174	Magnet	
83	1.5195	3/8"F-1/2"F reduction	
84	1.6696	Lx microswitch, white cable	
85	1.010326	Cable entry fitting, electrical connections	
86	2.012992	Mounting wall,circulating pump	
87	1.6984	Crossheaded flat pointed self-tapping screw (2,9x9,5)	
88	1.017453	Return valve	
88	1.025026	Check valve, 3-4"F-M	2743345
89	1.0375	Tube fitting (Vabco, d.18, G3/4")	
90	2.012105	Angle bracket, gas inlet pipe	
91	1.8251	OV15 check valve	
92	2.012091	Rx angle bracket, control panel	
93	2.010864	Lx angle bracket, control panel	
94	2.011012	Lx casing	
95	2.011013	Rx casing	
96	2.011014	Front casing	
97	1.018192	Plastic siphon	
98	1.013239	5-litre hot water expansion tank	
99	1.6091	Crossheaded flat pointed self-tapping screw (2,9x13)	
100	2.011171	Mounting bracket, valve	
101	2.011972	Angle bracket, expansion tank	
102	1.010430	Plug for flange with sample points	
103	2.011488	Top casing, rear	
104	1.013908	Earth terminal	
105	1.018956	Burner	
106	1.021762	NTC fast immersion probe	
107	1.010741	Seal, ceramic fibre, burner	
108	1.020211	Cord packing	
109	1.025406	Ecological fibre panel cover	
110	1.012711	Self-centring gasket	
111	1.013721	By-pass spring	
112	1.010662	Gas manifold cover	
113	1.011864	Red silicone O-ring (202,87x2,62)	
114	1.011114	Crossheaded self-tapping screw (3,9x9,5)	
115	1.021206	Fan, MVL RG128	
116	2.013134	Rear closing plate	
117	1.017750	Venturi	
118	1.1705	Two cable bracket	
119	3.013626	Ignition electrode group	
120	1.015586	Front shell	
121	1.015587	Rear cladding	
122	1.016053	Cylinder probe	
123	1.1868	2.2x13 self-tapping screw, crosshead, nickel-plated	
124	3.012567	Casing flap assembly	
125	1.1759	Shaped cylinder seal	
126	1.1760	M8x22 screw, hex head	
127	2.012600	Bracket, module fixing	
128	1.021483	Silicone hood gasket	
129	1.013340	Trimmer adjustment knob	
130	1.1356	Nut for flanged end pipe (3/4" F, d.18)	
131	1.4139	Crossheaded self-tapping screw (3,9x13)	
132	1.020955	Plastic foot, frame	
133	1.015806	Thermometer	
134	1.013961	Detection electrode	
135	2.013438	Bracket, frame connection	
136	1.022363	Peroxide epdm O-Ring (17,86x2,62)	
137	1.4407	By-pass diaphragm, noryl	
138	1.024061	Modulating control card	
139	1.7012	Seal, 37x26.8x2 klingersil	
140	2.3123	Locknut for coil (3/4"F)	
141	1.8864	Cone pointed "Rapid fix" self-tapping screw (3,2x9,5)	
142	1.021226	Crossheaded self-tapping screw with shoulder (4,2x19)	
143	1.0143	Crossheaded swageform screw (M6x15)	
144	1.011846	Gas valve, VK4115	
145	1.012686	Control panel back cover	
146	1.6947	17.17x1.78 O-ring, nitrile, 70 sh	
147	1.2369	Crossheaded screw (M4x12)	
148	1.2343	21.89x2.62 O-ring, nitrile, 70 sh	
149	2.013111	Top frame	
150	1.2311	Flange, gas valve	
151	1.4072	Clip with clamp screw hole	
152	1.016115	Bezel, control panel	
153	1.018042	D.14 pipe, gas valve - manifold	
154	1.010365	LED lens	
155	1.015807	Manometer	
156	1.010263	Main switch knob	
157	1.011978	Control unit	
158	1.010564	Switch, three positions+reset	
159	1.011968	Adjustment-hole plug	
160	1.024102	Fan flange for pipe fixing	
161	2.010930	Rear angle bracket, top casing	
162	1.019698	Flue outlet lip seal	
163	2.010448	Bottom frame	
164	1.022735	Transformer	
165	1.017749	G20 gas nozzle	
165	1.018202	LPG gas nozzle	
166	1.017563	Automatic vent valve + O-Ring	
167	1.012568	Abs handle	
168	2.011008	Casing protecting control unit	
169	1.1269	Lowered brass nut (1/2"F)	
170	1.023511	Gasket (30x22x2)	
171	2.010610	Lx angle bracket, chamber back	
172	3.011506	Top hinge assembly	
173	2.010593	Rx guide bracket, boiler cylinder	
174	2.010594	Lx guide bracket, boiler cylinder	
175	2.012324	Rx frame	
176	2.011582	Lx frame	
177	2.011583	Frame rear member	
178	2.013334	Seal ring	
179	3.015657	Flue hood group	
180	1.4246	Lock washer (M4)	
181	1.021818	Condensation module	
182	1.016779	Dummy ignition electrode	
183	1.011057	Pressure point screw	
184	1.014785	Gas manifold gasket	
185	1.7051	Safety valve (8 bar)	
186	1.8403	Stainless steel mesh filter	
187	1.012028	Red silicone O-ring (9,19x2,62)	
188	1.012874	Plastic "Immergas" nameplate	
189	1.021232	Ceramic glass (d.40)	
190	1.017282	Gasket for module inspection hole	
191	2.010177	Flange for module cover inspection hole	
192	2.012094	Pipes bulkhead	
193	1.2446	Draw pull catch, G type	
194	2.4261	Bracket, sealed chamber cover	
195	1.015661	30 litre limiter	
196	3.013373	Cold inlet valve asembly	
197	1.1709	Nitrile O-Ring (23,47x2,62,70 sh)	
199	3.013901	Top casing, front	
200	1.1116	Nut (M8)	
201	1.5057	Fitting for drain cock	
202	1.5058	Locknut, drain fitting	
203	1.5207	Seal, 17x24x2 klingersil	
204	1.5066	23.39x3.53 O-ring, nitrile, 70 sh	
205	1.5062	Cylinder fitting for hot outlet	
206	1.019181	Red silicone O-ring (72,69x2,62)	
207	1.017972	D.42 pipe, manifold	
208	1.014551	Expansion vessel pipe (d.10)	
209	1.016935	Connection housing cover	
210	1.018592	Blind nut (M6)	
211	2.010982	Copper washer (6x12x1)	
212	1.013421	25.81x3.53 O-ring, viton	
213	1.021829	Clip, exchanger pipes	
214	2.4440	Cylinder cover	
215	1.013250	Fitting for cold inlet	
216	2.011827	Bracket, module fixing	
217	2.011828	Module mount bracket	
218	1.1175	"Rapid fix" self-tapping screw (3,2x13)	
219	1.013154	Adhesive foam strip (d.15x3)	
220	2.012511	Module mount	
221	1.025986	Silicone pipe (4x8)	
222	2.011643	Back panel, sealed chamber	
223	2.011929	Sealed chamber side panel	
224	2.010055	Cap for hole d.80	
225	1.014033	Control panel surround	
226	1.2364	Brass pressure point	
227	1.6413	10x5x1 washer, plastic	
228	1.6221	Hose union for silicone pipe	
229	1.013217	Flange with sample points	
230	1.5754	Burner gasket	
231	1.5539	Nitrile O-Ring (63x3,70 sh)	
232	1.013094	Display card	
233	1.013480	Probe pipe	
234	1.6922	Nitrile O-Ring (10,77x2,62,70sh)	
235	1.024084	Crossheaded screw (M5x14)	
236	3.016822	Glass inspection hole group with gasket	
237	2.4270	Angle bracket, foam strip	
238	2.4271	Bracket, Rx	
238	2.4272	Bracket, Lx	
239	2.011279	Cover, sealed chamber	
240	1.019654	Flexible hose for siphon	
241	1.023190	Siphon plug	
243	1.011131	D.8 grommet, pipe	
244	1.023434	Silicone fairlead (d.16)	
245	1.017913	Fan fixing flange	
246	1.025064	Silicone fairlead (d.12,5)	
247	1.025546	D.40 pipe, air intake	
248	3.012829	Coil group	
249	1.016795	Electrode seal	
250	3.012238	3-way pump connection fitting assembly	
251	3.5312	Differential pressure switch assembly - complete	
252	1.6406	Silicone fairlead (d.5)	
253	1.8372	Stainless steel crosshead screw (M5x10)	
254	1.012468	Stainless steel elastic washer (M5)	
255	1.2170	Crossheaded screw (M4x8)	
256	1.016122	D.18 pipe, gas connection	
257	1.016869	Annealed copper washer (10x5x1)	
258	1.017229	Cupheaded self-tapping screw (2,9x22)	
259	1.1248	Crossheaded screw (M6x18)	
260	1.0110	Crossheaded flat pointed self-tapping screw (4,2x13)	
261	1.013219	Cone pointed crossheaded self-tapping screw (4,2x6,5)	
262	1.0278	Seal, 28x21x2 in flexoid	
263	1.021532	Circulating pump 15-70	
264	3.012830	Coil assembly, solar panels	
265	2.010972	Position reference plate, by-pass valve	
266	2.011829	Hood hanger bracket	
267	1.010844	Clip, pipe probe	
268	1.014286	Mixing valve motor	
269	1.014368	Mixing valve	
269	1.021836	Valve cartridge kit	
270	1.015804	Thermometer	
271	1.016199	D.18 pipe,3-way valve - pump low temperature kit	
272	1.016200	D.18 pipe,delivery low temperature kit	
273	1.016201	D.18 pipe,return low temperature kit	
273	1.020153	D.18 pipe,return low temperature kit	2743345
274	1.016211	1"M-D.18 Vabco fitting	
275	1.016529	50°C clicson thermostat	
275	1.011958	55°C clicson thermostat	2660996
276	2.011964	Support bracket,thermometer	
277	1.013544	2-way terminal block	
278	3.017383	Box, electrical connections assembly	
279	1.013208	Adjustment-hole plug	
280	1.017139	Adjustment card	
280	1.021965	Adjustment card	2660996
281	1.6729	Epdm probe cap	
282	1.7703	Cable clamp + ring nut	
283	2.013133	Support bracket box electrical connections	
284	1.018066	Box, electrical connections	
285	1.018387	Insulating panel, rear	
286	1.8599	Washer (4,3x12)	
287	2.012092	Bracket,control panel clip	
288	1.016967	Spring pipe clamp for silicone pipe	
289	1.025987	Silicone tube (14x10)	
290	1.010500	Spring pipe clamp for silicone pipe	
291	1.022208	Adhesive foam mat	
292	1.012592	D.18 pipe, system supply	
292	1.019284	D.18 pipe, system return conn.	2743345
293	1.018817	3/4' M - F extension	2743345
294	2.013439	Bracket, frame stiffening	
295	2.012510	Bracket, flue outlet clicson mount	2743345
296	1.012067	100°C clicson thermostat	2743345