IMMERGAS	SERIAL NUMBER START OF SERIES	29/11/05	HERCULES CONDENSING 27	05D
	1977670	3.014231		

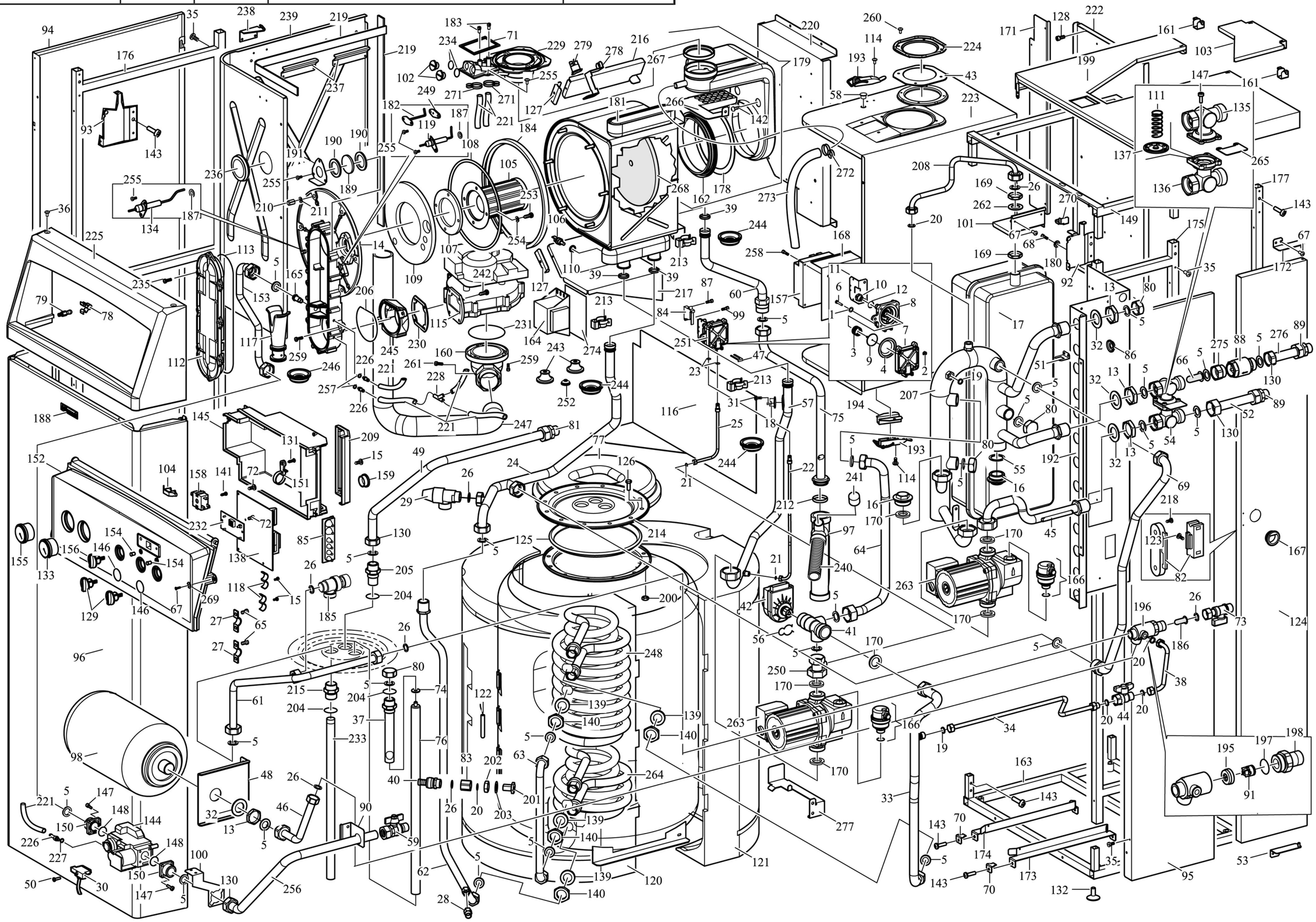

N.	CODE	DESCRIPTION	SERIAL NUMBER START OF SERIES
-	3.013073	Sealed chamber cover assembly	
-	3.013652	Set of leads for ignitor - sensor	
-	3.014208	Control panel - complete	
-	3.014362	Cylinder - complete	
-	3.014474	LPG gas conversion kit	
-	3.014475	G20 gas conversion kit	
-	3.016260	Control panel - complete	2734388
1	1.0237	4.1x8x0.5 brass washer	
2	1.1391	M4 brass nut	
3	1.2262	Spring for plate	
4	1.2264	Diaphragm, pressure switch	
5	3.A0120	Set of 3/4" seals	
6	1.2299	M4x25 screw, brass, hex head	
7	1.2300	Housing, pressure switch, noryl	
8	1.2301	Cover, pressure switch, noryl	
9	2.4848	Pressure switch plate - complete	
10	2.4849	Pressure switch cover fitting - complete	
11	2.5298	Bracket for microswitch	
12	1.2269	9.25x1.78 O-ring, nitrile, 70 sh	
13	1.1260	3/4" F shallow brass nut	
14	1.010589	Gas manifold	
15	1.1142	3.2x16 self-tapping screw, "Rapid Fix"	
16	1.012594	1" M plug BSP	
17	1.013402	12-litre expansion tank	
18	1.010405	100°C clicson thermostat	
19	3.A0184	Set of 1/4" seals	
20	3.A1124	Set of 3/8" seals	
21	3.A2313	Set of 1/8" seals	
22	1.014432	D.5 pipe, negative pressure takeoff	
23	1.2268	3.68x1.78 O-ring, nitrile, 70 sh	
24	1.018055	D.18 pipe, module return	
25	1.016144	D.5 pipe, positive pressure port	
26	3.A1363	Set of 1/2" seals	
27	1.7908	Steab cable clamp, black	
28	1.4275	Drain outlet with hose union	
29	1.0180	Safety valve, 3 bar 1/2"M	
30	3.013598	Additional gas valve connection	
31	1.1656	3.5x6.4 self-tapping screw, crosshead, nickel-plated	
32	1.1342	Seal, 34x27x2 in flexoid	
33	1.016146	D.18 pipe, 3-way valve / boiler flow	
34	1.012585	D.8 pipe, stopcock - boiler flow	
35	1.4557	4.2x9.5 self-tapping screw, crosshead, with shoulder	
36	1.4066	3.5x9.5 self-tapping screw	
37	1.5367	Recirculating probe fitting	
38	1.014038	D.8 pipe, cold inlet - filling	
39	1.011141	17.86x2.62 O-ring, silicone, 70 sh	
40	1.0113	1/2"M drain valve	
41	3.012255	3-way valve assembly	
42	1.014399	3-way valve motor	
43	1.010334	Seal, d.80 hole	
44	1.018047	3/8" ball valve	
45	1.017605	D.18 pipe, heating system flow - pump	
46	1.016411	D.14 pipe, cold inlet assembly - expansion tank	
47	2.4179	Clip for pressure takeoff fitting	
48	2.010929	Angle bracket, hot water tank	
49	1.016791	D.14 pipe, hot outlet connection	
50	1.010265	M3x25 screw for gas valve connector	
51	2.010935	Angle bracket, heating system expansion tank	
52	1.012592	D.18 pipe, system supply	
53	3.011507	Bottom hinge	
54	3.013639	By-pass assembly	
55	1.5409	28.42x2.62 O-ring, nitrile	
56	1.014397	Motor locking fork	
57	1.018043	D.18 pipe, module - pump	
58	1.017970	Cover, d.5 hole	
59	1.018094	G1-2 twin-cone gas cock D.18	
60	1.017390	D.18 stainless steel pipe, condensation outlet	
61	1.014042	D.14 pipe,cold water inlet - boiler	
62	1.014993	D.18 pipe, cylinder return	
63	1.012670	D.18 pipe, coil connection	
64	1.016624	D.18 pipe, 3-way valve - manifold	
65	1.7967	3.5x19 self-tapping screw, crosshead	
66	1.016823	Filter	
67	1.2275	4.2x9.5 self-tapping screw, crosshead, flat point	
68	1.7030	M4x10 screw, crosshead, swageform	
69	1.016974	D.18 pipe, module return pipe manifold	
70	2.011722	Bracket, cylinder hanger	
71	1.010340	Gasket, pocket flange	
72	1.2265	3.2x9.5 self-tapping screw, "Rapid fix"	
73	1.013629	Cock G1/2"M-F	
74	1.5364	Seal, 20x8x2 in frizite	
75	1.017023	D.18 pipe, condensation discharge	
76	1.019472	Magnesium anode	
77	1.017122	Insulation cover, boiler cylinder	
78	1.014430	Metal fastener, female	
79	1.014429	Metal fastener, male	
80	1.0257	3/4" F brass plug	
81	1.020058	D.14-1/2"M Vabco fitting - complete	
82	1.1174	Magnet	
83	1.5195	3/8"F-1/2"F reduction	
84	1.6696	Lx microswitch, white cable	
85	1.010326	Cable entry fitting, electrical connections	
86	1.5778	D.18 grommet, pvc	
87	1.6984	2.9x9.5 self-tapping screw, crosshead, flat point	
88	1.017453	Return valve	
88	1.019242	Check valve, 3-4"F-M	2734388
89	1.0375	D.18-3/4"M Vabco fitting - complete	
90	2.012105	Angle bracket, gas inlet pipe	
91	1.8251	OV15 check valve	
92	2.012091	Rx angle bracket, control panel	
93	2.010864	Lx angle bracket, control panel	
94	2.011012	Lx casing	
95	2.011013	Rx casing	
96	2.011014	Front casing	
97	1.018192	Drain trap, plastic	
98	1.013239	5-litre hot water expansion tank	
99	1.6091	2.9x13 self-tapping screw, crosshead, flat point	
100	2.011171	Mounting bracket, valve	
101	2.011972	Angle bracket, expansion tank	
102	1.010430	Plug for pocket flange	
103	2.011488	Top casing, rear	
104	1.013908	Earth terminal	
105	1.018956	Burner	
106	1.021762	NTC fast immersion probe	
107	1.010741	Seal, ceramic fibre, burner	
108	1.011132	Cord packing	
109	1.014732	Ceramic fibre panel, cover	
110	1.012711	Seal, self-centring	
111	1.013721	By-pass spring	
112	1.010662	Cover, gas manifold	
113	1.011864	202.87x2.62 O-ring, red silicone	
114	1.011114	3.9x9.5 self-tapping screw, crosshead	
115	1.021206	Fan, MVL RG128	
116	2.011920	Rear closing plate	
117	1.017750	Venturi	
118	1.1705	Two cable bracket	
119	3.013626	Ignitor, twin-row	
120	1.015586	Front shell	
121	1.015587	Rear cladding	
122	1.016053	Cylinder probe	
123	1.1868	2.2x13 self-tapping screw, crosshead, nickel-plated	
124	3.012567	Casing flap assembly	
125	1.1759	Shaped cylinder seal	
126	1.1760	M8x22 screw, hex head	
127	2.012600	Bracket, module fixing	
128	1.2402	3.9x6.5 self-tapping screw, crosshead, flat point	
129	1.013340	Trimmer adjustment knob	
130	1.1356	3/4" F nut, flanged end pipe, d.18	
131	1.4139	3.9x13 self-tapping screw, crosshead	
132	1.013708	Plastic foot, frame	
133	1.015806	Thermometer	
134	1.013961	Ignitor sensor	
135	nfs	Lx housing, by-pass	
136	nfs	Rx housing, by-pass	
137	1.4407	By-pass diaphragm, noryl	
138	1.015510	Modulating control card	
139	1.1524	Seal, 36x27x2 in frizite	
140	2.3123	3/4'F locknut for coil	
141	1.8864	3.2x9.5 self-tapping screw, "Rapid fix", cone point	
142	1.021226	4.2x19 self-tapping screw, crosshead, with shoulder	
143	1.0143	M6x15 screw, crosshead, swageform	
144	1.011846	Gas valve, VK4115	
145	1.012686	Back cover, control panel	
146	1.6947	17.17x1.78 O-ring, nitrile, 70 sh	
147	1.2369	M4x12 screw, crosshead	
148	1.2343	21.89x2.62 O-ring, nitrile, 70 sh	
149	2.011973	Top frame	
150	1.2311	Flange, gas valve	
151	1.4072	Clip with clamp screw hole	
152	1.016115	Bezel, control panel	
153	1.018042	D.14 pipe, gas valve - manifold	
154	1.010365	LED lens	
155	1.015807	Pressure gauge	
156	1.010263	Knob, main switch	
157	1.011978	Control unit	
158	1.010564	Switch, three positions+reset	
159	1.011968	Plug, access hole	
160	1.011752	Flange, pipe fixing fan	
161	2.010930	Rear angle bracket, top casing	
162	1.019698	Flue outlet lip seal	
163	2.010448	Bottom frame	
164	1.012477	Transformer	
165	1.017749	G20 gas nozzle	
165	1.018202	LPG gas nozzle	
166	1.017563	Automatic vent valve	
167	1.012568	Abs handle	
168	2.011008	Casing protecting control unit	
169	1.1269	1-2" F shallow brass nut	
170	3.A1343	Set of 1" seals	
171	2.010610	Lx angle bracket, chamber back	
172	3.011506	Top hinge assembly	
173	2.010593	Rx guide bracket, boiler cylinder	
174	2.010594	Lx guide bracket, boiler cylinder	
175	2.012324	Rx frame	
176	2.011582	Lx frame	
177	2.011583	Frame rear member	
178	2.010792	Seal ring	
179	3.015657	Flue outlet assembly	
180	1.4246	M4 lock washer	
181	1.017410	Condensation module	
182	1.016779	Dummy ignition electrode	
183	1.011057	Screw, pressure test point	
184	1.014785	Gas manifold seal	
185	1.7051	Safety valve, 8 bar	
186	1.8403	Mesh filter, stainless	
187	1.012028	9.19x2.62 O-ring, red silicone	
188	1.012874	"Immergas" nameplate, plastic	
189	1.021232	Ceramic lens, d.40	
190	1.017282	Seal, module inspection hole	
191	2.010177	Flange, module cover inspection hole	
192	2.012094	Pipes bulkhead	
193	1.2446	Draw pull catch, G type	
194	2.4261	Bracket, sealed chamber cover	
195	1.015661	30 litre limiter	
196	3.013373	Cold inlet valve asembly	
197	1.1709	23.47x2.62 O-ring, nitrile, 70 sh	
198	nfs	Filter holder fitting	
199	3.013901	Top casing, front	
200	1.1116	M8 nut	
201	1.5057	Fitting for drain cock	
202	1.5058	Locknut, drain fitting	
203	1.5207	Seal, 17x24x2 klingersil	
204	1.5066	23.39x3.53 O-ring, nitrile, 70 sh	
205	1.5062	Cylinder fitting for hot outlet	
206	1.019181	72.69x2.62 O-ring, red silicone	
207	1.017972	D.42 pipe, manifold	
208	1.014551	D.10 pipe, expansion tank	
209	1.016935	Connection housing cover	
210	1.018592	M6 cap nut	
211	2.010982	6x12x1 aluminium washer	
212	1.013421	25.81x3.53 O-ring, viton	
213	1.010371	Clip, exchanger pipes	
214	2.4440	Cylinder cover	
215	1.013250	Fitting for cold inlet	
216	2.011827	Bracket, module fixing	
217	2.011828	Module mount bracket	
218	1.1175	3.2x13 self-tapping screw, "Rapid fix"	
219	1.013154	Adhesive foam strip, d.15x3	
220	2.012511	Module mount	
221	1.2363	4x8 silicone tube	
222	2.011643	Back panel, sealed chamber	
223	2.011929	Side wall, sealed chamber	
224	2.010055	Cover, d.80 hole	
225	1.014033	Control panel surround	
226	1.2364	Brass fan pressure port	
227	1.6413	10x5x1 washer, plastic	
228	1.6221	Hose union for tubes in silicone	
229	1.013217	Pocket flange	
230	1.5754	Seal, burner	
231	1.5539	63x3 O-ring, nitrile, 70 sh	
232	1.013094	Display card	
233	1.013480	Probe pipe	
234	1.6922	10.77x2.62 O-ring, nitrile, 70 sh	
235	1.0151	M5x12 screw, crosshead	
236	3.012705	Inspection hole glass assembly with seal	
237	2.4270	Angle bracket, foam strip	
238	2.4271	Bracket, Rx	
238	2.4272	Bracket, Lx	
239	2.011279	Cover, sealed chamber	
240	1.015290	L.600 pipe	
241	1.023190	Air trap plug	
242	1.010803	M5x12 hex socket screw	
243	1.011131	D.8 grommet, pipe	
244	1.6600	Grommet, silicone, d.16	
245	1.017913	Flange, fan fixing	
246	1.011362	D.12 pipe grommet in silicone	
247	1.017745	D.40 pipe, air intake	
248	3.012829	Coil assembly	
249	1.016795	Electrode seal	
250	3.012238	3-way pump connection fitting assembly	
251	3.5312	Differential pressure switch assembly - complete	
252	1.6406	Grommet, silicone, d.5	
253	1.8372	M5x10 screw, crosshead, stainless steel	
254	1.012468	M5 stainless steel split washer	
255	1.2170	M4x8 screw, crosshead	
256	1.016122	D.18 pipe, gas connection	
257	1.016869	Annealed copper washer 10x5x1	
258	1.017229	2.9x22 self-tapping screw, dome head	
259	1.011914	M6x16 hex socket screw	
260	1.0110	4.2x13 self-tapping screw, crosshead, flat point	
261	1.013219	4.2x6.5 self-tapping screw, crosshead, cone point	
262	1.0278	Seal, 28x21x2 in flexoid	
263	1.016414	Circulating pump 63-15	
264	3.012830	Coil assembly, solar panels	
265	2.010972	Position reference plate, by-pass valve	
266	2.011829	Hood hanger bracket	
267	1.021483	Hood seal, silicone	
268	1.018387	Insulating panel, rear	
269	1.8599	4.3x12 washer	
270	2.012092	Bracket,control panel clip	
271	1.010500	Spring pipe clamp for silicone pipe	
272	1.016967	Spring pipe clamp for silicone pipe	
273	1.019744	14x10 silicone tube	
274	1.022208	Adhesive foam mat	
275	1.018817	3/4' M - F extension	2734388
276	1.012592	D.18 pipe, system supply	
276	1.019284	D.18 pipe, system return conn.	2734388
277	2.011881	Bracket, circulating pump mount	
278	2.012510	Bracket, flue outlet clicson mount	2734388
279	1.012067	100°C clicson thermostat	2734388